Grazia
Bedside tables

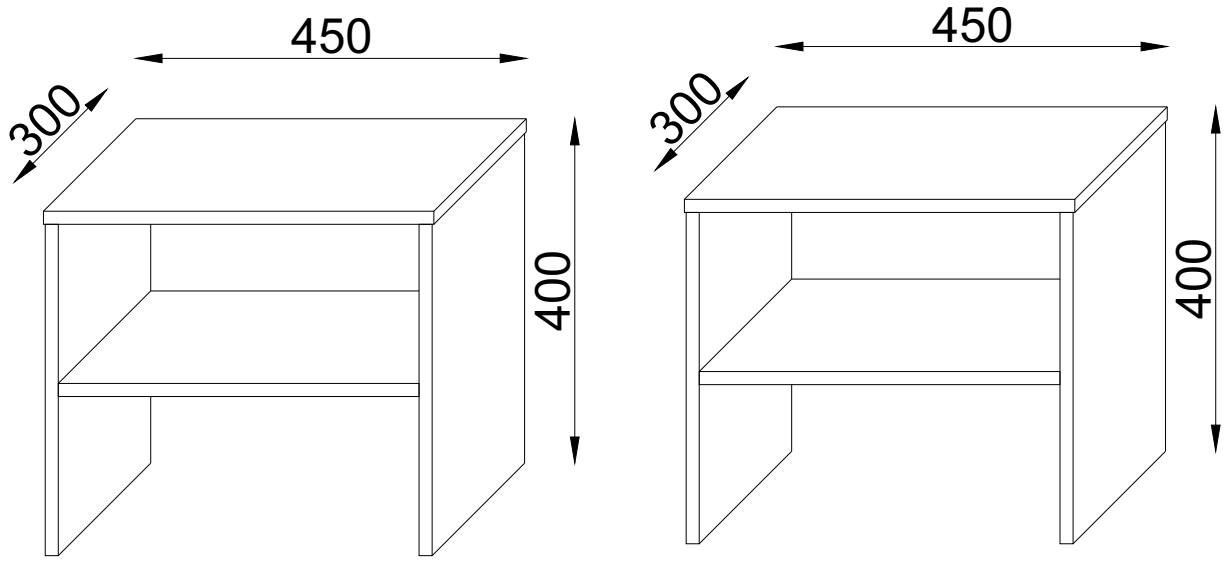

ASSEMBLIY INSTRUCTIONS

WARNING! THIS PRODUCT SHOULD BE ASSEMBLED BY ADULTS ONLY

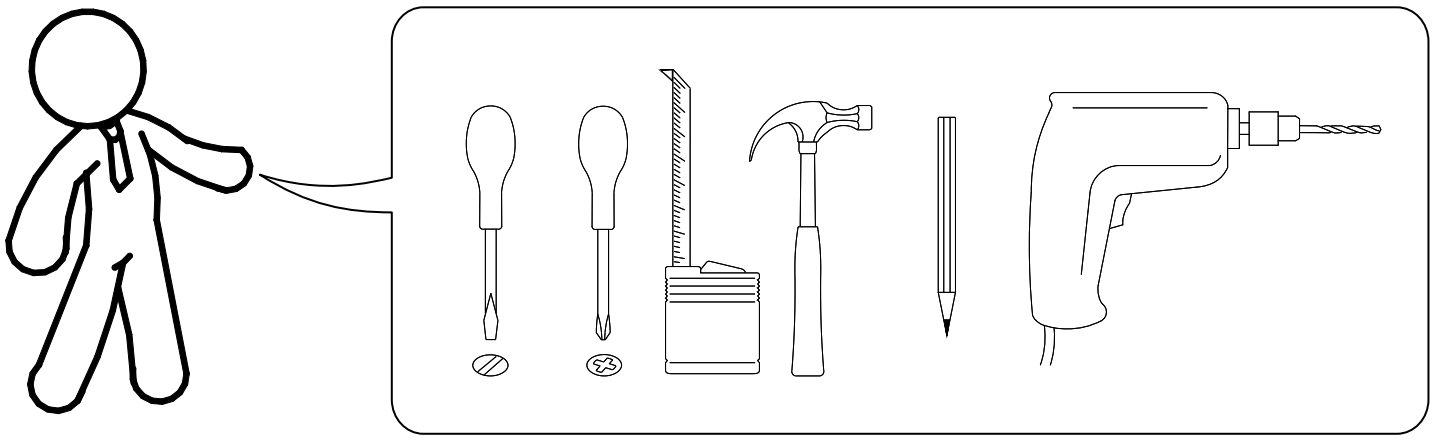

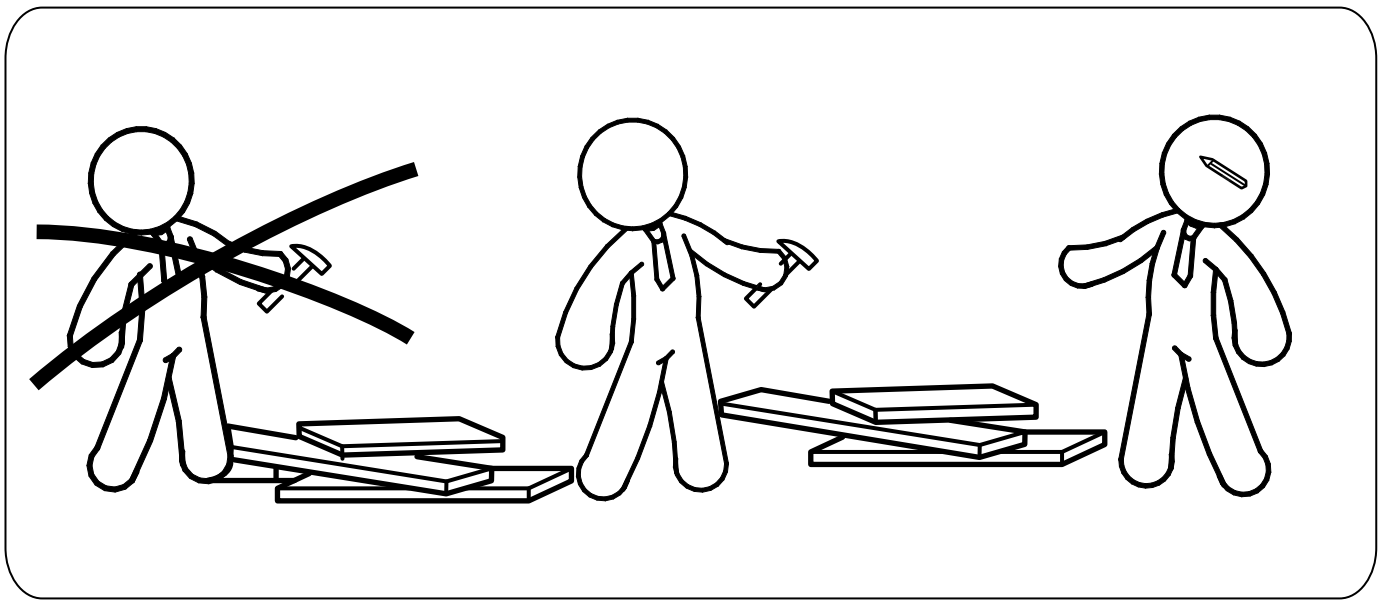

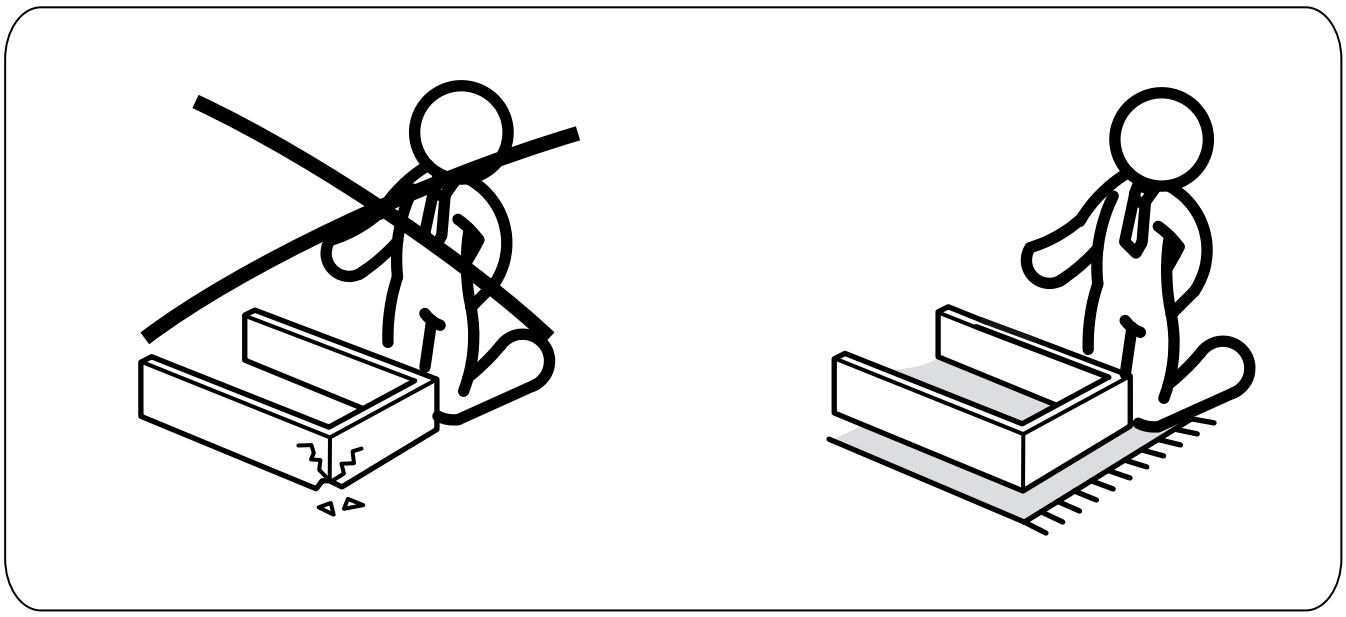

1.30 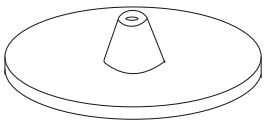 x9	1.16 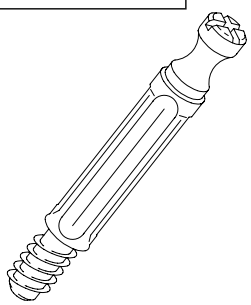 x9	1.17 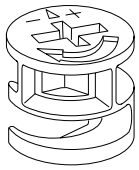 x9
1.3 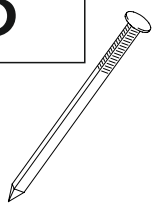 0.01kg	1.9 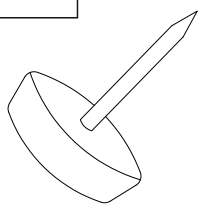 x8	1.14 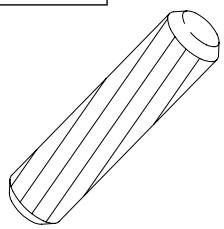 x17

№1 488/ 298/ 128	1	380*	296	2
	2	380*	296	2
	3	448*	298**	2
	4	414*	294	2
	5	440	210/3	2
	Fittings			1

1

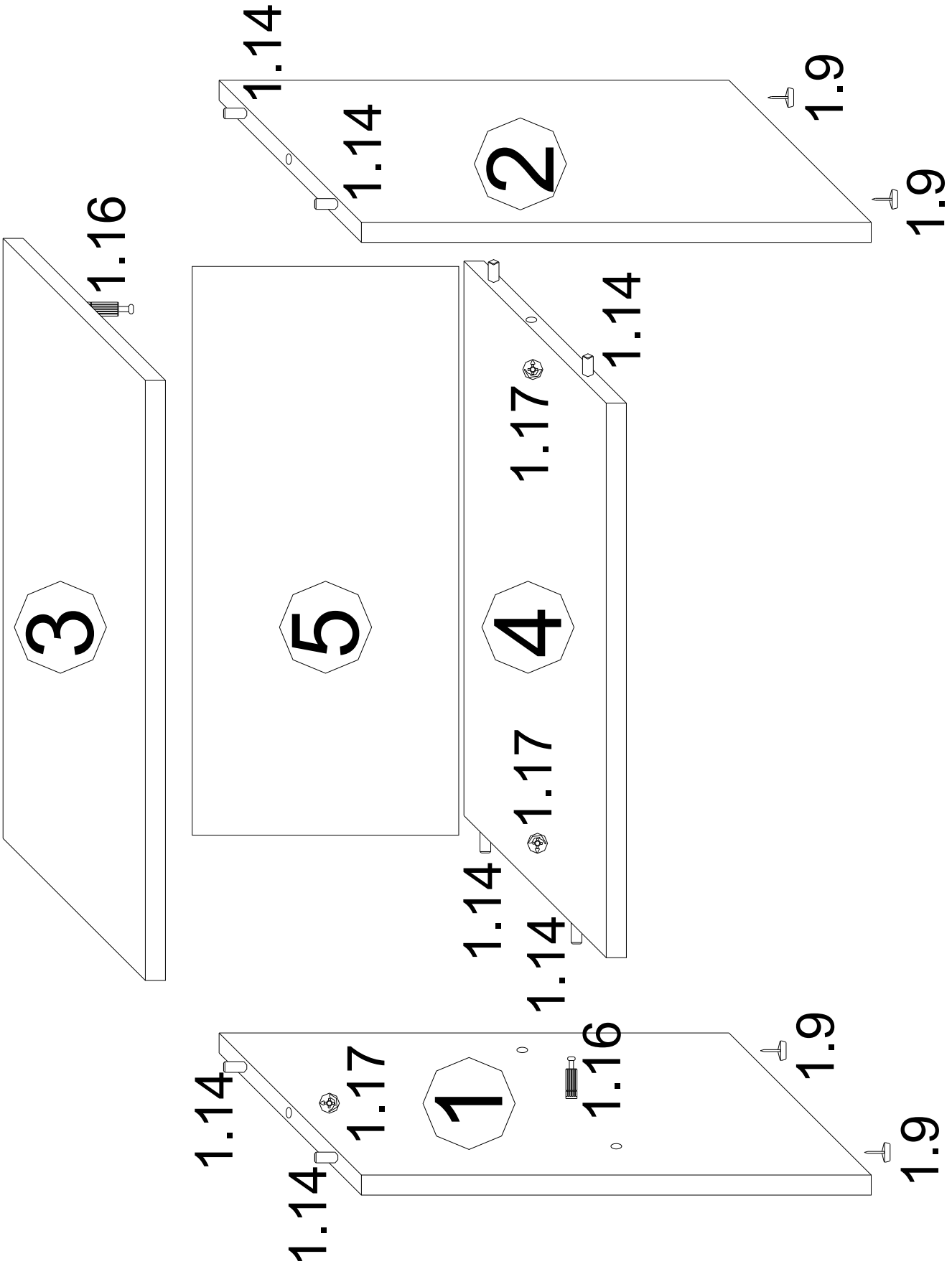
1.14
1.14
2
1.9
1.9
1.16
3
5
4
1.17
1.14
1.17
1.14
1.14
1.14
1.17
1
1.16
1.9
1.14
1.14
1.9

2

