Grazia
Bed 160/200

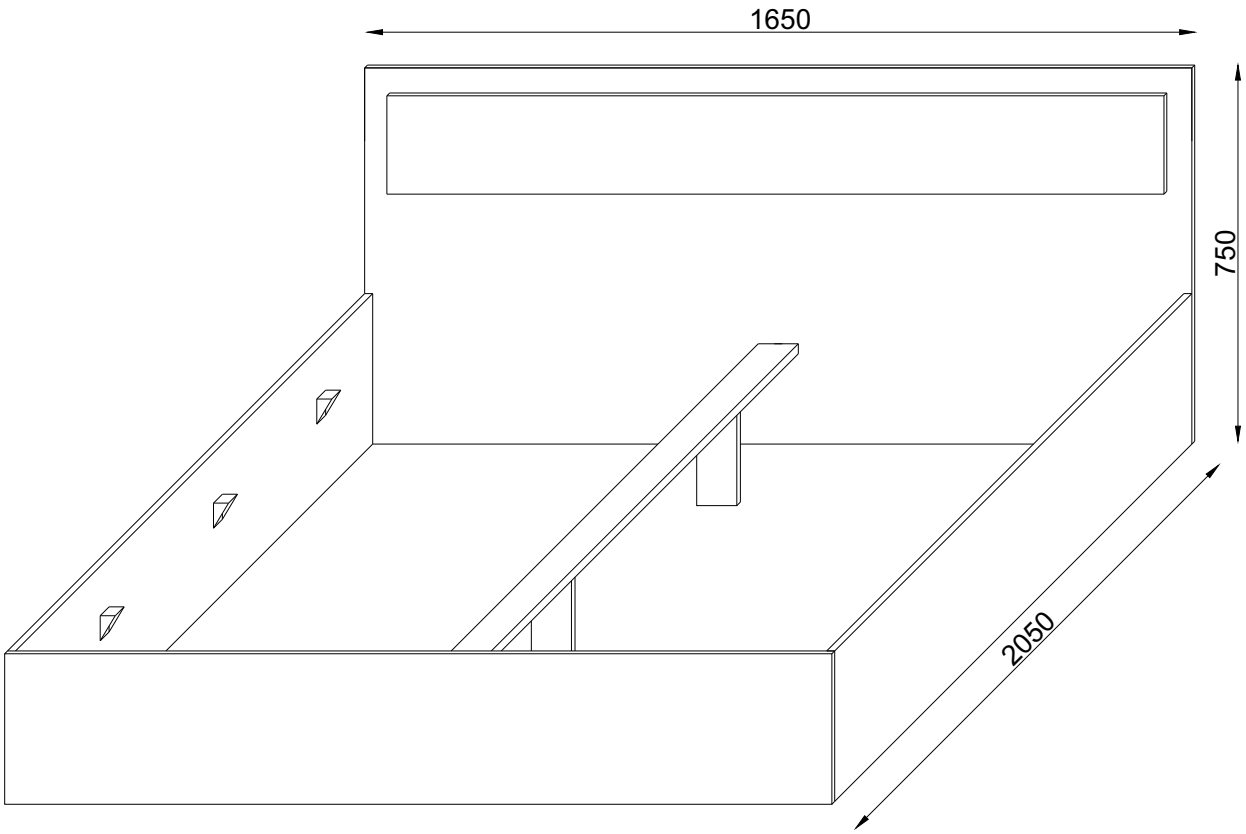

ASSEMBLIY INSTRUCTIONS

WARNING! THIS PRODUCT SHOULD BE ASSEMBLED BY ADULTS ONLY

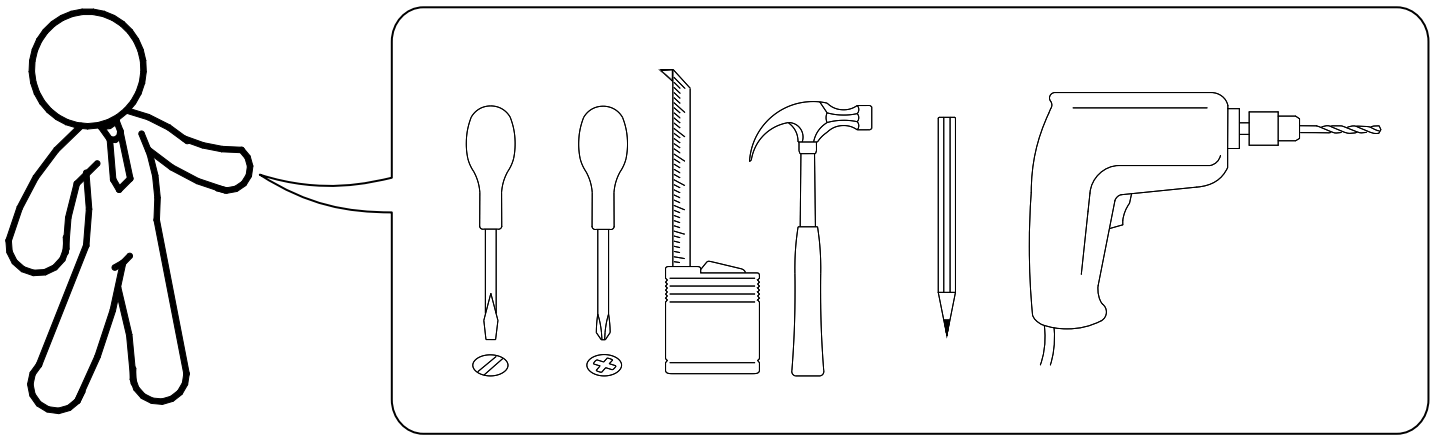

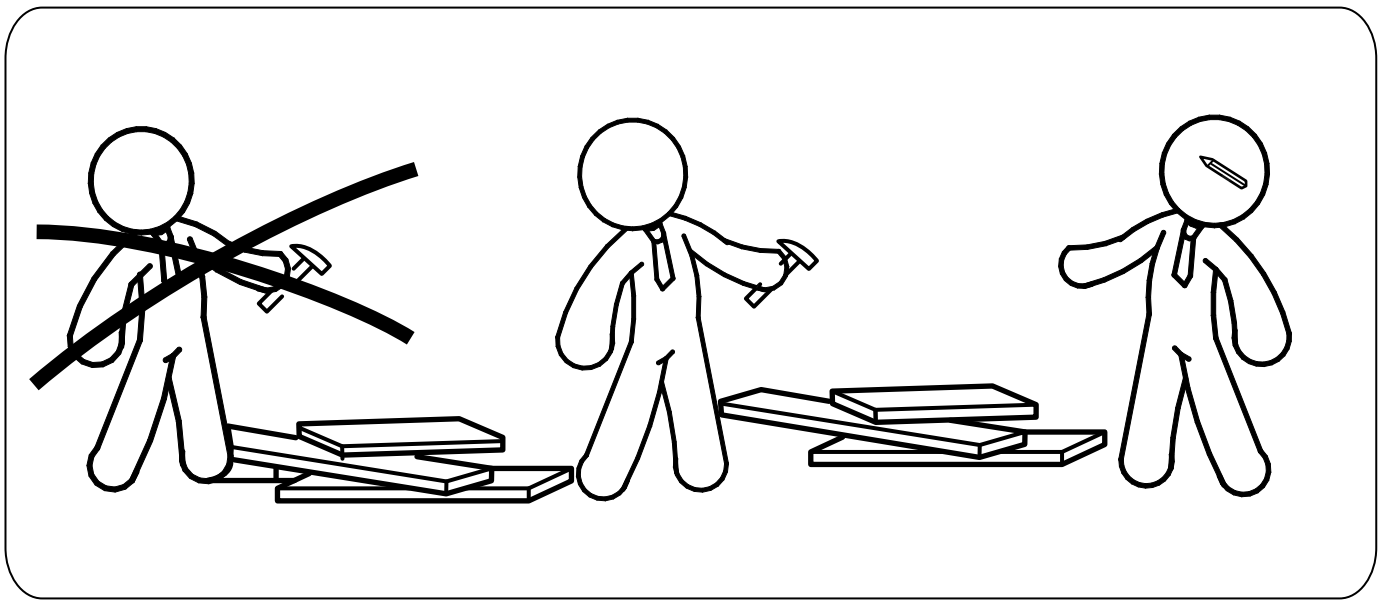

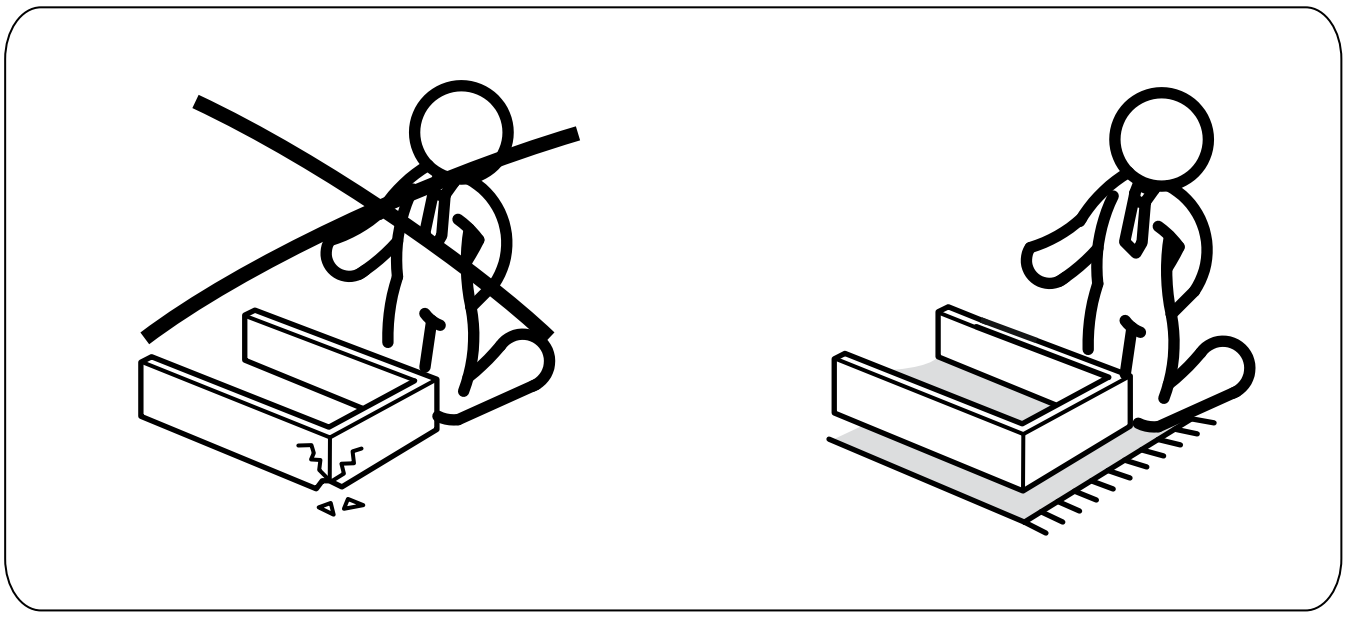

1.24 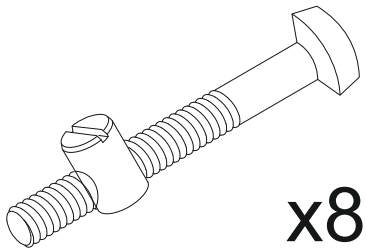 x8	1.63 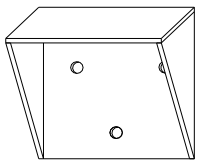 x6	1.64 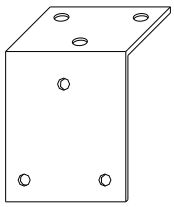 x2
1.33 4x50 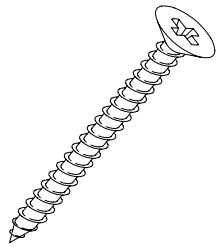 x2	1.9 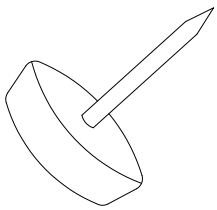 x10	1.47 4x25 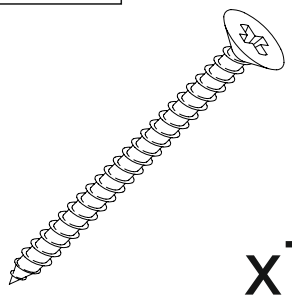 x7
1.71 4x16 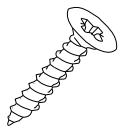 x32		

№1 2050/ 296/ 68	2	2010*	296	2
	4	2005	65/20	1
	5	174	65/20	2
	Fittings			1
№2 1680/ 746/30	1	1640*	746**	1
	3	1640*	296**	1
	6	1550**	196**	1

1

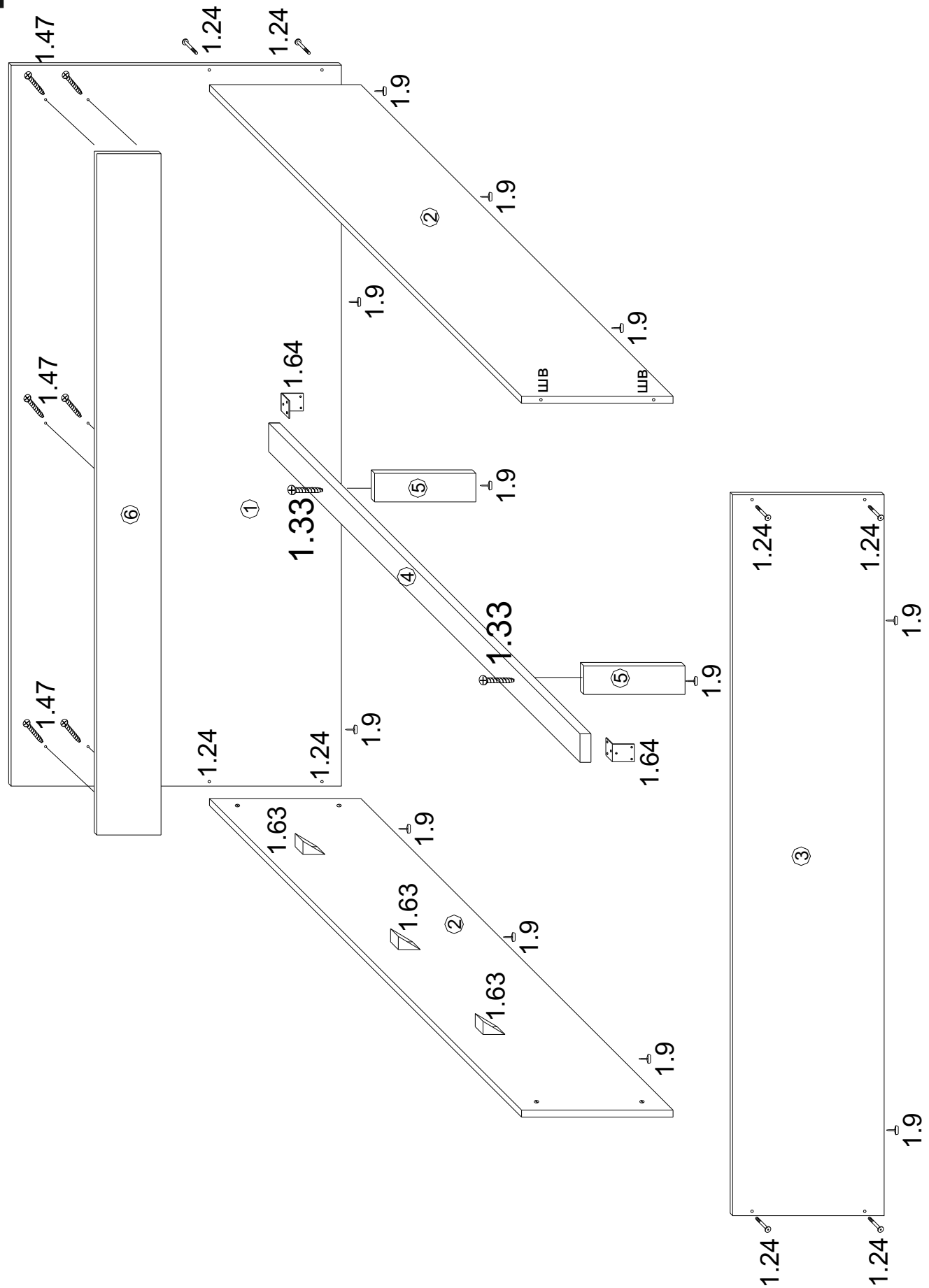
1.47
1.24
1.24
1.9
1.9
1.9
1.9
1.64
1.47
1.33
1.9
1.33
1.47
1.24
1.24
1.9
1.64
1.63
1.9
1.63
1.9
1.63
1.9
1.24
1.24
1.9
1.9
1.24
1.24
ШВ
ШВ
1
2
2
3
4
5
5
6