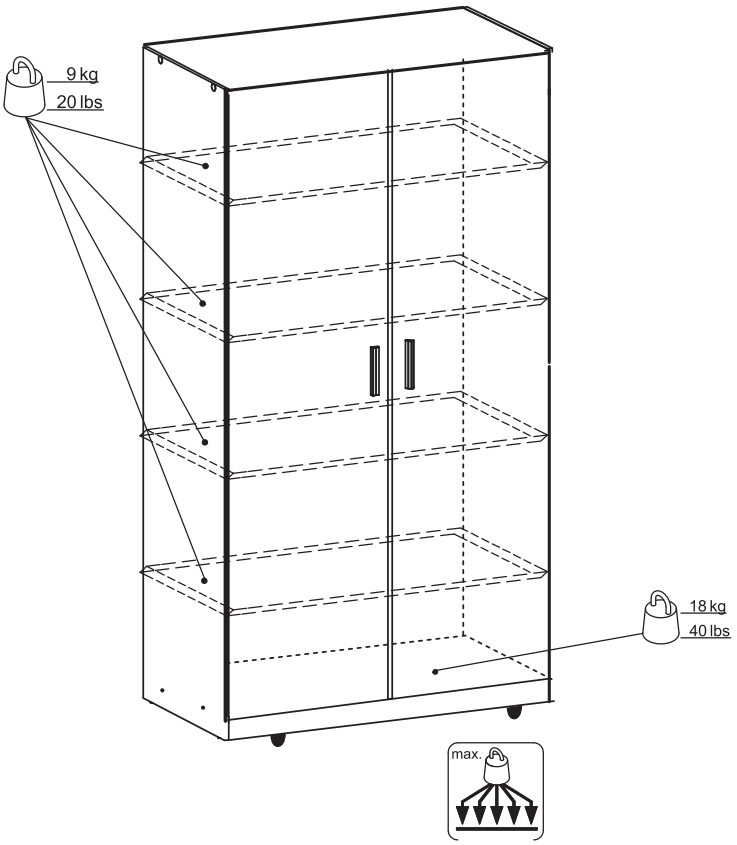



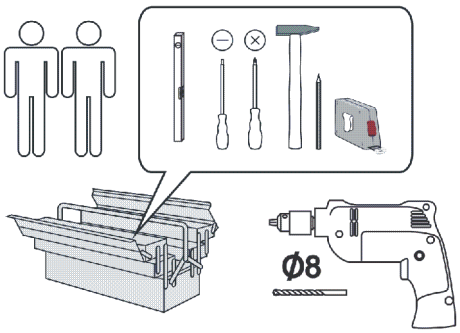

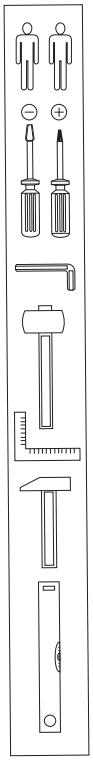

1 x6	Balama aplicata	4 4x16 x24	Holtzsurub	7 x2	Maner
2 x12	Suport polite	5 x6	Picioare	8 M4x20 x4	Surub
3 x16	Eurosurub	6 x100	Cuisoare	10 x1	Cheie imbus

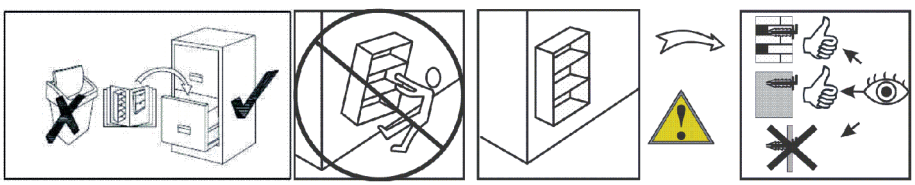

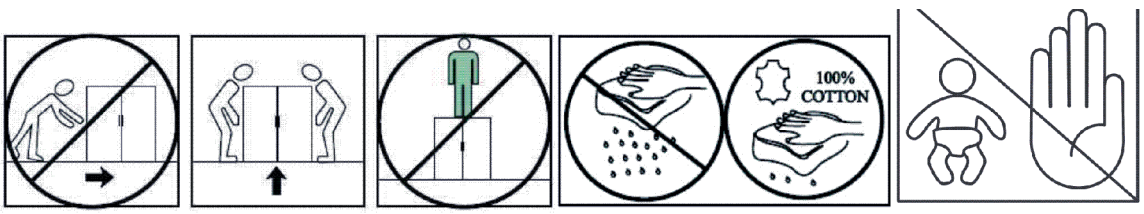

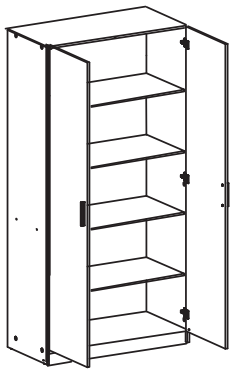

A	B(mm)	C(mm)	D(mm)	E(buc)
LS	1900	480	18	1
LD	1900	480	18	1
US	1815	395	18	1
UD	1815	395	18	1
PS	764	480	18	1
PJ	764	480	18	1
SD	1815	395	0.3	2
R1	764	450	18	1
R2	764	425	18	3
BF	764	80	18	1

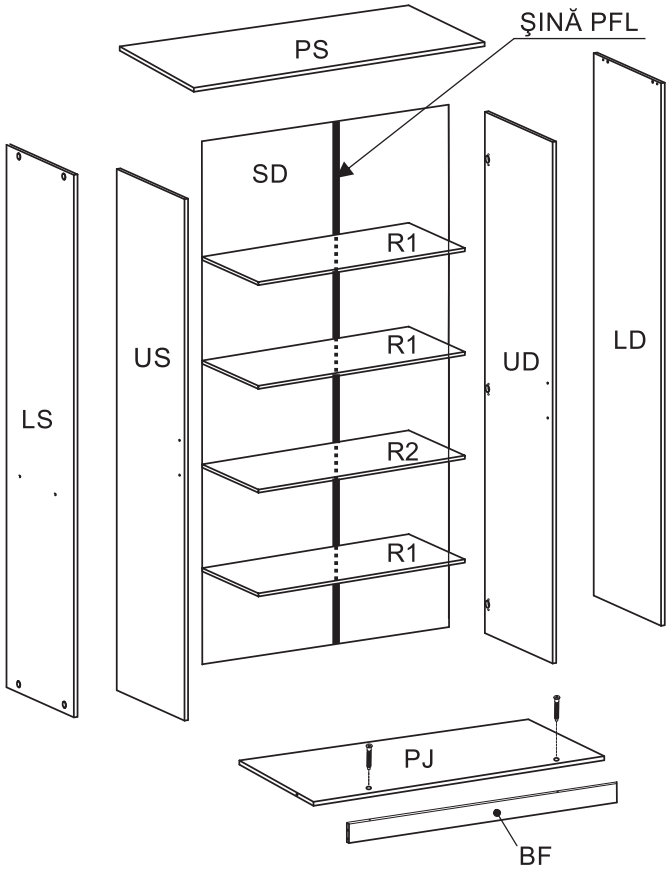

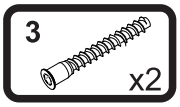

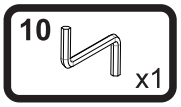

1

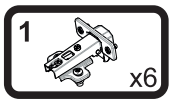



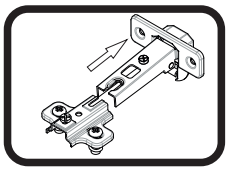

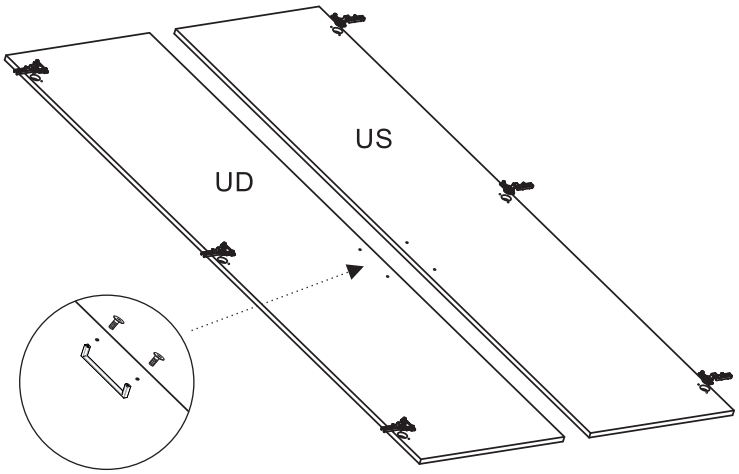

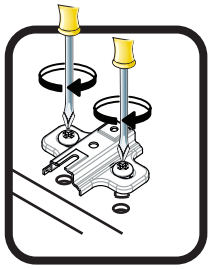

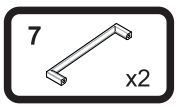

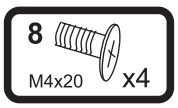

2

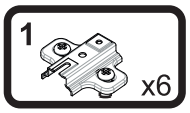



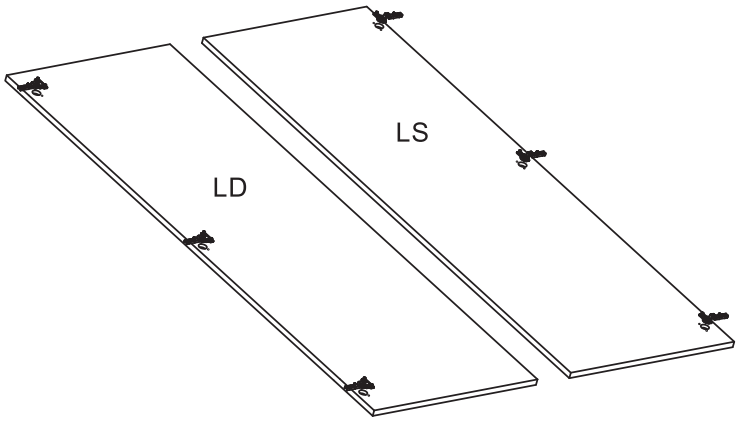

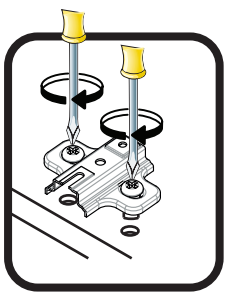

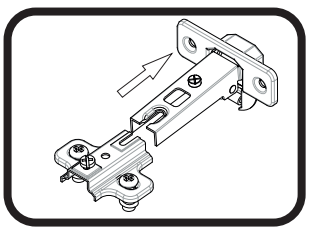

3

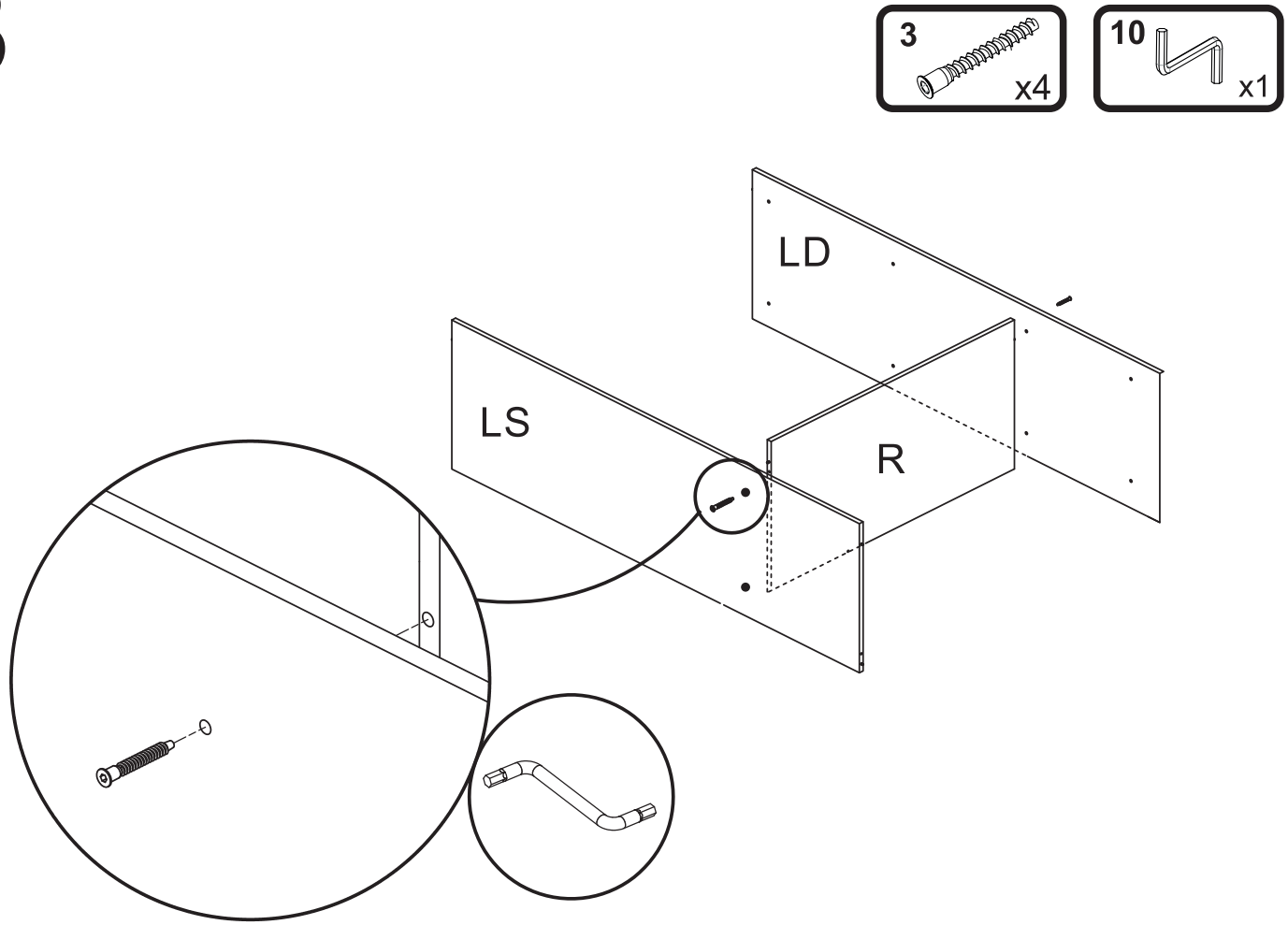

4

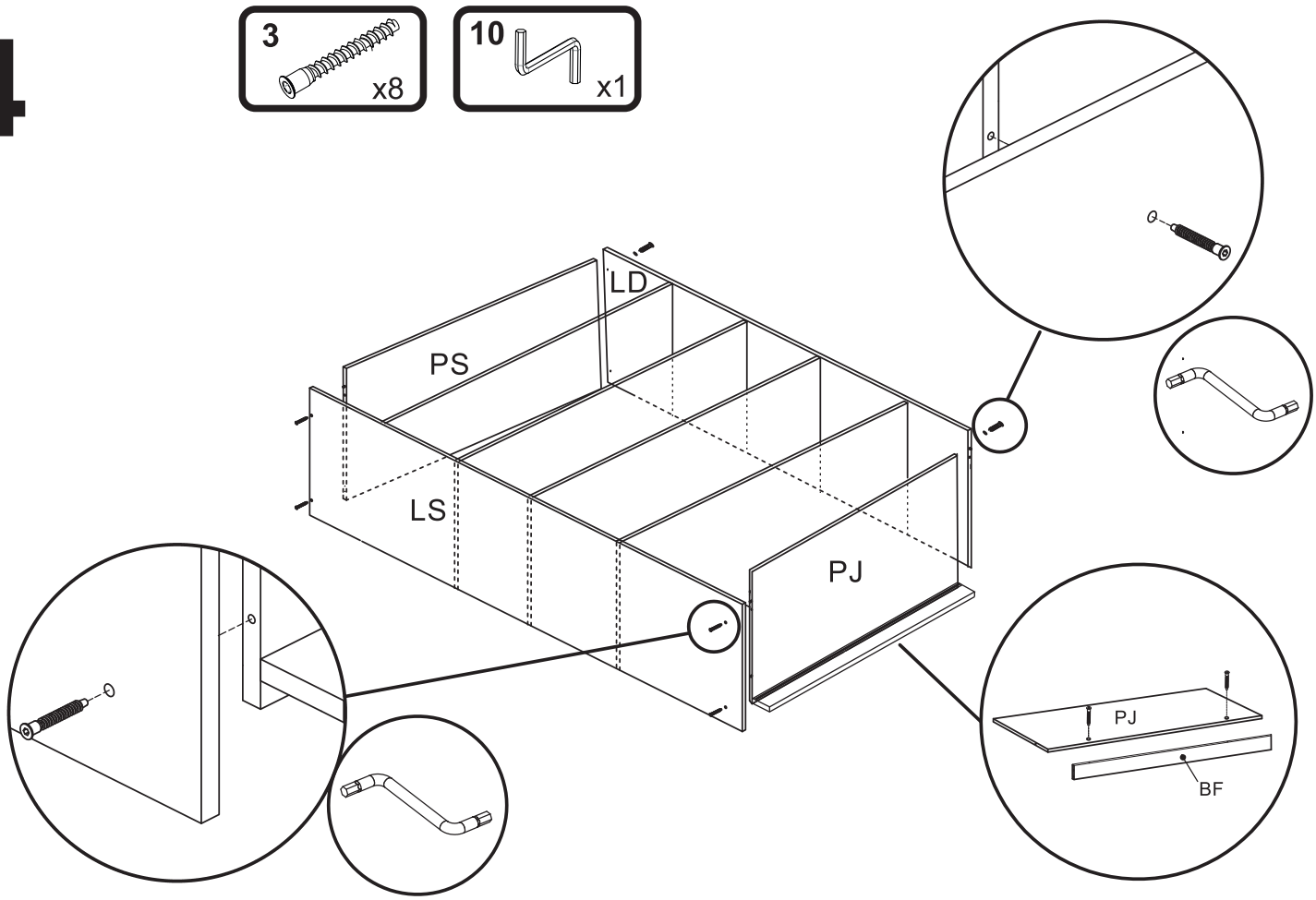

5

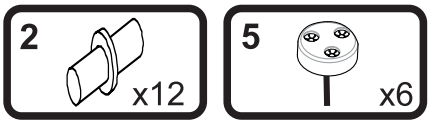

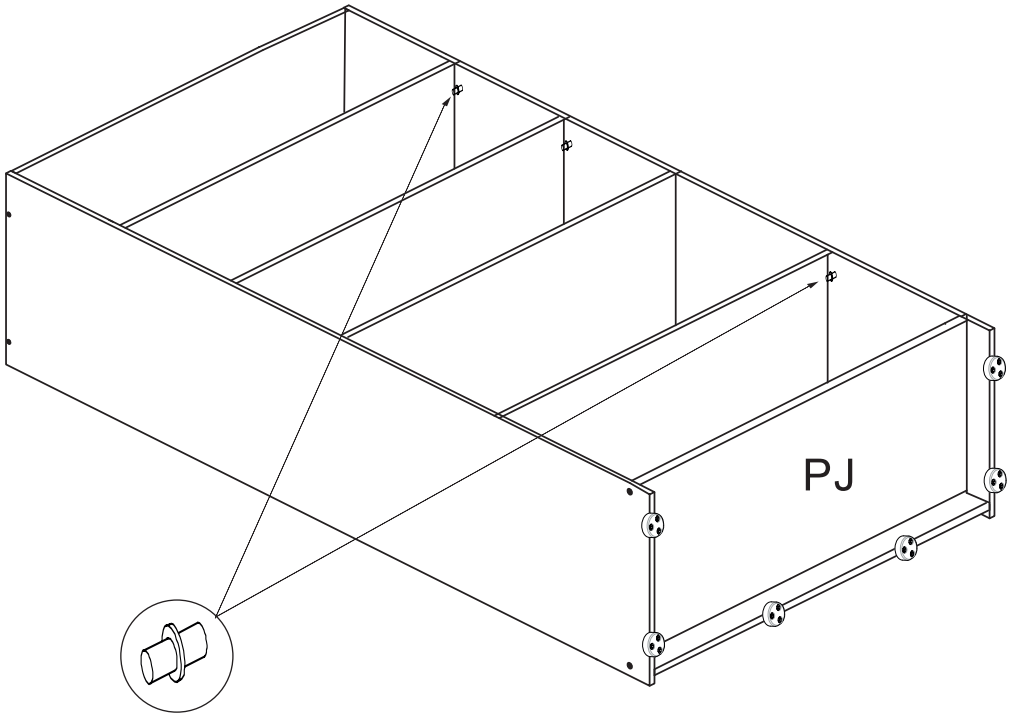

6



