KODAK EKTAR H35
Half Frame Film Camera

Quick Start Guide



Please read this Guide carefully before using and keep it with you for future reference.

GETTING STARTED

1. Camera Back
2. Back Lock
3. Film Cassette Chamber
4. Film Rewind Shaft
5. Flash
6. Film Advance Wheel
7. Film Sprocket Wheel
8. Film Take-up Spool
9. Shutter Release Button
10. Film Counter
11. Viewfinder Eyepiece
12. Flash On/Off Wheel
13. Flash Ready Light
14. Film Rewind Button
15. Film Rewind Crank
16. Battery Compartment Cover
17. Lens
18. Camera Starp Holder

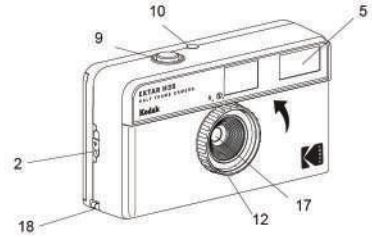

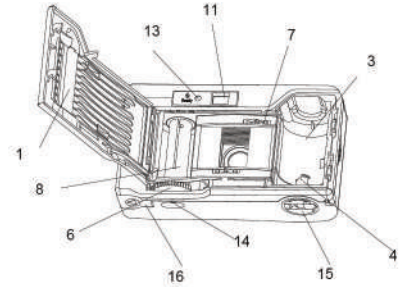

Loading Film

1. Open the Camera Back (1) by releasing the Back Lock (2).
2. Place the film cassette into the Film Cassette Chamber (3), ensuring that the hollow end of the film is inserted into the Film Rewind Shaft (4).
3. When the cassette seats properly in place, draw out and insert the leader of the film into the Film Take-up Spool (8).
4. Press the Shutter Release Button (9) once and roll the Film Advance Wheel (6).
5. Make sure the film perforations are engaged with the teeth of the Film Sprocket Wheel (7).
6. Close the Camera Back (1) after the film is loaded correctly.
7. Press the Shutter Release Button (9) once.
   Repeat the steps until the Film Counter (10) displays "1".
   The Film Counter (10) indicates the number of exposures of the film roll at the moment.

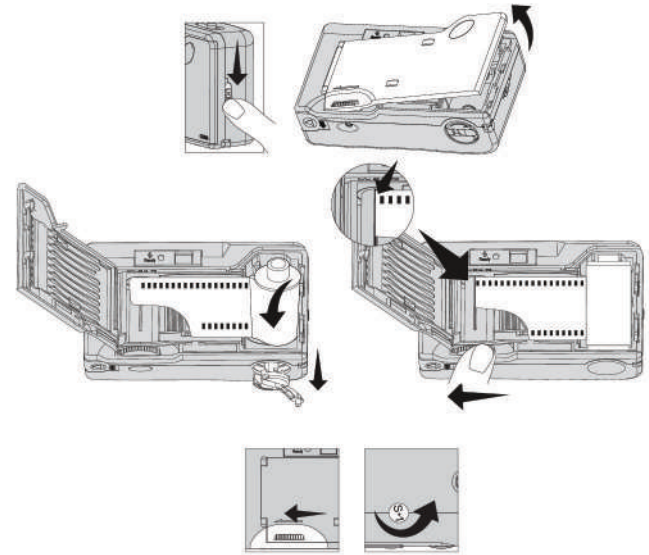

Loading Battery

1. Push open the Battery Compartment Cover (16).
2. Insert one AAA alkaline battery into the Battery Compartment Cover (16) according to the + indication.
3. Close the Battery Compartment Cover (16).

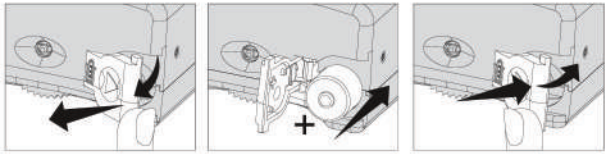

Taking Photo

1. Compose your picture by looking through the Viewfinder Eyepiece (11).
2. Place the key object of your photo at least 1.5 metres away from you.
3. Determine whether to turn the flash on.
4. Press the Shutter Release Button (9) lightly to take a photograph.
5. After taking a photograph, roll the Film Advance Wheel (6) until it stops rolling.
6. Repeat Step 1 to 5 to take the next photo.

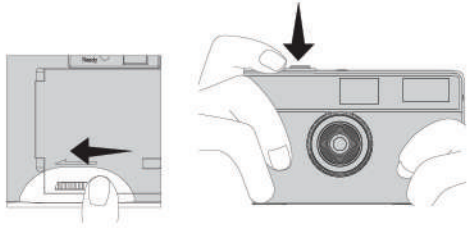

Unloading Film

1. After taking the last photo, the Film Advance Wheel (6) will stop to roll.
2. Press the Film Rewind Button (14) to release the film for rewinding.
3. Lift the Film Rewind Crank (15) and rotate it clockwise to rewind the film.
4. Open the Camera Back (1) and take out the film for processing.

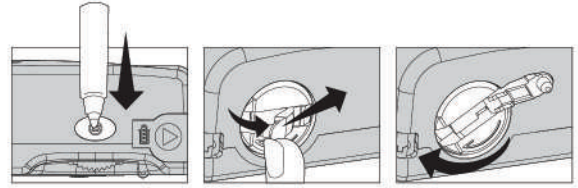

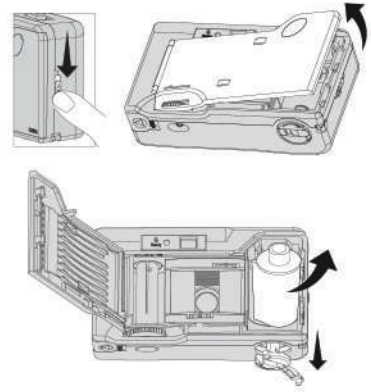

Note: 1 shot of KODAK EKTAR H35 yields 2 half frame photos. A 36-exp film gives 72 half frame photos while a 24-exp film gives 48 half frame photos

Using Flash

1. When shooting indoor or in a dim/cloudy environment, turn on the flash by adjusting the Flash On/Off Wheel (12).
2. Wait until the Flash Ready Light (13) is on.
3. Turn the flash off while not in use.

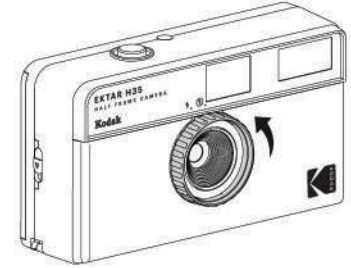

IMPORTANT:
When the Flash is switched on and the Flash Ready Light turns red, flash will be charged once. Flash will be released for the next photo.

If you don't wish to have flash for the next photo, please switch the Flash Wheel to the "Off" position quickly before the Flash Ready Light turns red.

BATTERY WARNING:
Improper replacement of battery may present a risk of leakage or explosion, and may cause personal injuries. Mistreated rechargeable battery may present a risk of fire or chemical burn. Do not disassemble or expose the battery to conducting materials, moisture or extreme heat. Do not use or charge the battery if it appears to be leaking, discoloured, deformed, or in any abnormalities. Do not leave the battery discharged or unused for an extended period of time. Avoid extremely high or low temperatures during use, storage or transportation of batteries. Battery life varies with usage. Non-operational battery should be disposed according to local laws, or dispose it in a waste bin for electronics if not governed by applicable laws or regulations. Keep batteries away from children.

www.retopro.co/kodak
© 2022 RETO Production Ltd. All rights reserved.
The Kodak and Ektar trademarks, Kodak logo and trade dress are used under license from Kodak.